enlarge +

# Guth Fuel Cell

+ VIEW SPECIFICATIONS

ADD TO RFQ

Dom. Part No.: **FC-9000-GN**

The Guth Fuel Cell is a high quality, electrochemical device that generates a voltage across the output electrodes when an ethanol gas sample is introduced into the cell.

Consider only Guth Fuel Cells as an original or replacement component in your hand carried and/or evidential alcohol breath analyzers.

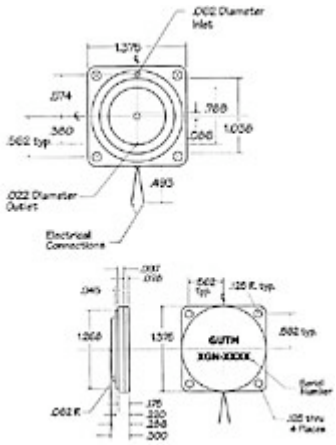

enlarge +

## ADAPTABLE TO CMI AND ALCOSENSOR INSTRUMENTS

## PERFORMANCE

| | |
|---|---|
| Linear operating temp. range: | +10°C to +40°C |
| Storage temp.range: | -5°C to +55°C |
| Operating life: | 1 year min. |

## TYPICAL PARAMETERS

| | |
|---|---|
| Peak output voltage | 3.8mV |
| Time to peak | 16 sec |
| Time to clear<5% of peak (2*) | 120 sec |
| Cell drop (3*) | 3% |

## TEST CONDITIONS

| | |
|---|---|
| Ethanol standard | 100 mg% |

| | |
|---|---|
| Sample volume | 1.20 ml |
| Load resistance (1*) | 390 ohms |

**MADE IN THE USA**